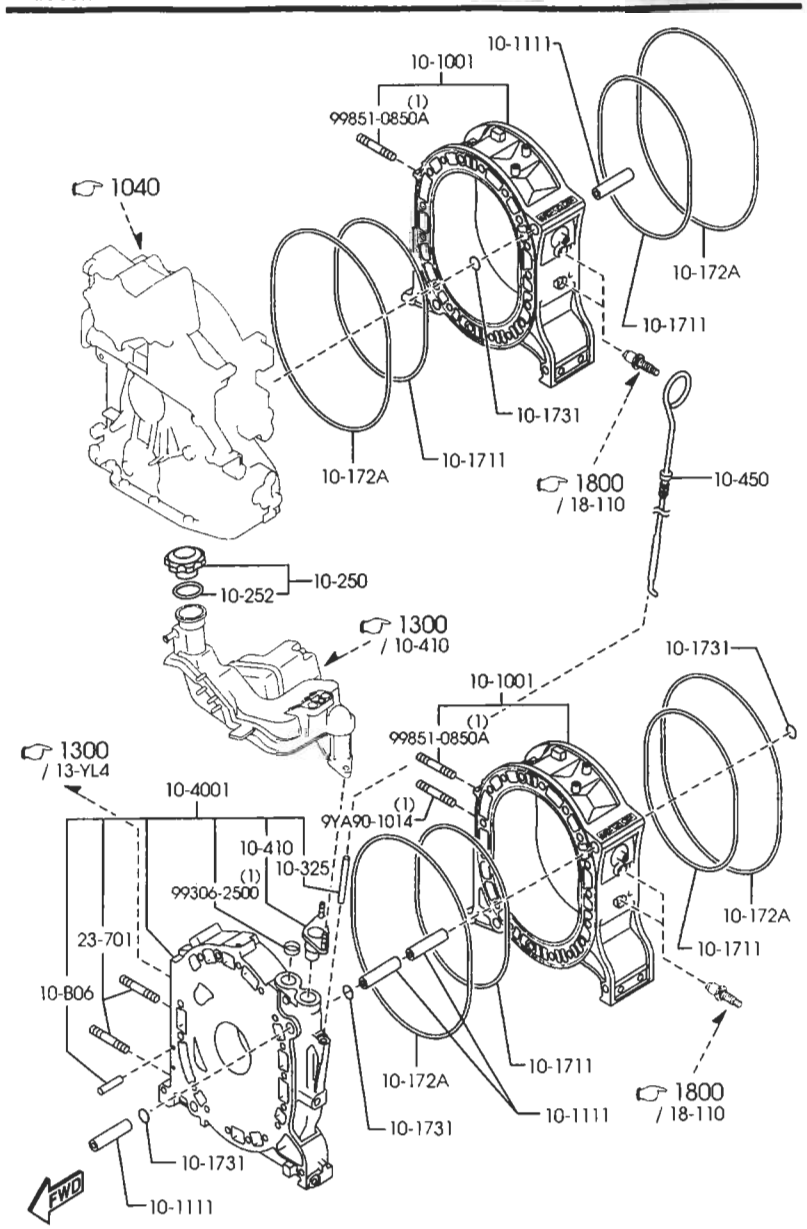






| PART NO. | QTY | MODEL/RESTRICTION | MODEL/RESTRICTION | MODEL/RESTRICTION | FROM-TO |
|---|---|---|---|---|---|
| 10-B06 | | PIN,SPRING | GOUJON,RESSORT | | |
| N3H1-10-B06 | 4 | | | | |
| 10-1001 | | HOUSING,ROTOR-FRONT | CARTER,ROTOR AV | | |
| N3H1-10-B10A | 2 | | | | |
| 10-1111 | | DOWEL,TUBULAR | RACCORD | | |
| 1757-10-111 | 4 | | | | |
| 10-1711 | | RING,SQUARE | JOINT,CARRE | | |
| N326-10-B71A | 4 | | | | |
| 10-172A | | RING,SQUARE-OUTER | ANNEAU CARRE EXT. | | |
| N326-10-B72 | 4 | | | | |
| 10-1731 | | RING,'O' | JOINT 'O' | | |
| N3A1-10-B73 | 4 | | | | |
| 10-250 | | CAP,OIL FILLER | BOUCHON, REMPLIS. HU ILE | | |
| N3H4-10-250 | 1 | | | | |
| 10-252 | | GASKET | JOINT | | |
| 0324-10-252 | 1 | | | | |
| 10-325 | | PIPE,OIL LEVEL GAUGE | TUYAU, | | |
| N326-10-441 | 1 | | | | |
| 10-4001 | | HOUSING,INTERMEDIATE | FLASQUE,INTERMEDIAIR E | | |
| N3H1-10-D00 | 1 | (AT) | (B.V.AUTOM) | | |
| N3H3-10-D00 | 1 | (MT) | (B.V.MANU) | | |
| 10-410 | | PIPE,OIL FILLER | TUYAU DE REMPLISSAGE D'HUILE | | |
| N3H1-10-D10 | 1 | | | | |
| 10-450 | | GAUGE,OIL LEVEL | JAUGE, NIVEAU D'HUIL E | | |
| N3H1-10-450A | 1 | | | | |
| 23-701 | | STUD,TURBOCHARGER | GOUJON,TURBO-CHARGEU R | | |
| SL50-13-708A | 2 | | | | |