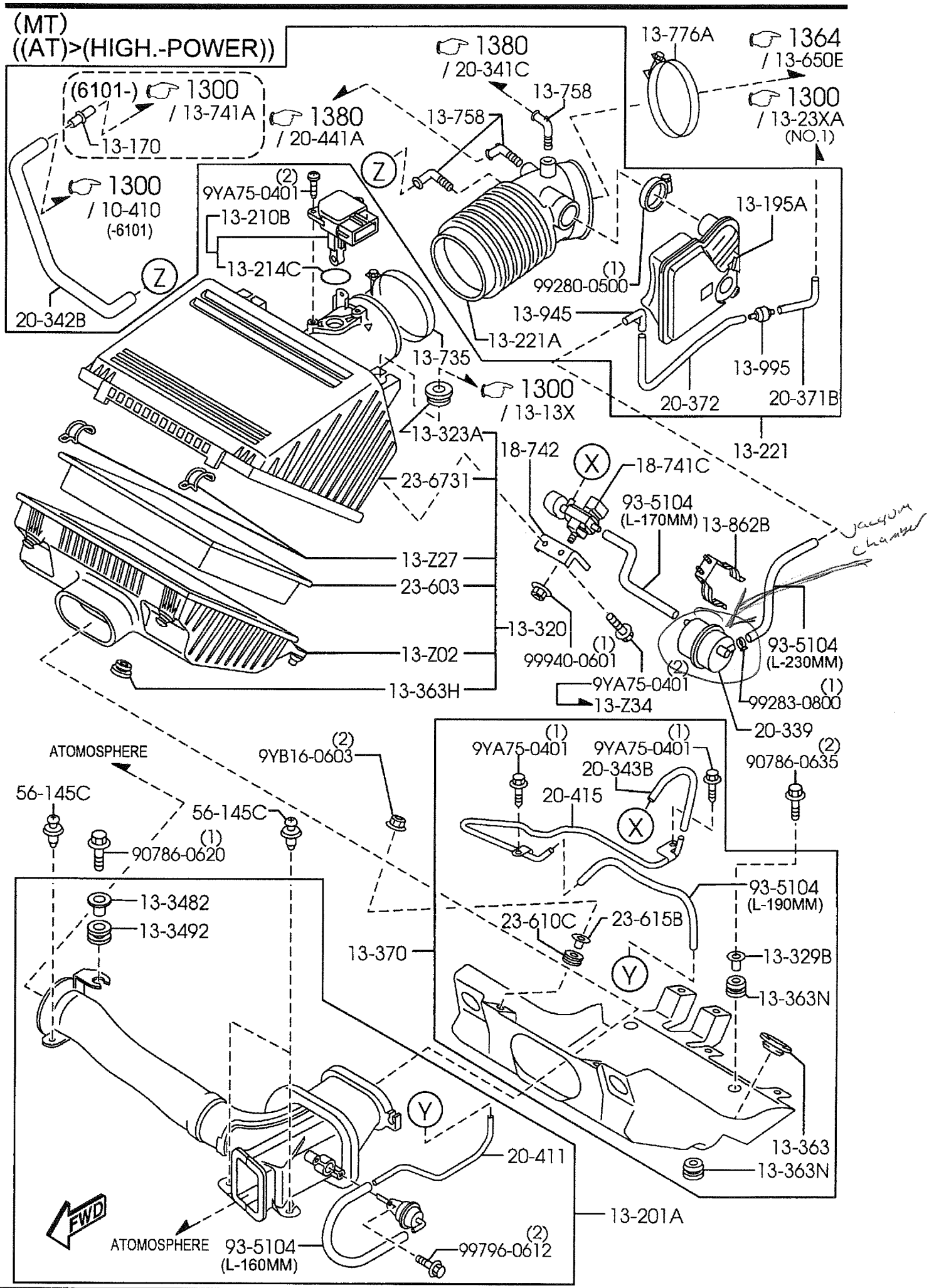
(MT)
((AT)>(HIGH.-POWER))
(6101-) 1300 / 13-741A
13-170
1380 / 20-441A
1380 / 20-341C
13-758
13-758
13-776A
1364 / 13-650E
1300 / 13-23XA (NO.1)
1300 / 10-410 (-6101)
20-342B
Z
(2) 9YA75-0401
13-210B
13-214C
13-195A
(1) 99280-0500
13-945
13-221A
13-735
1300 / 13-13X
13-995
20-372
20-371B
13-221
13-323A
18-742
X
18-741C
23-6731
93-5104 (L-170MM)
13-862B
Vacuum Chamber
13-Z27
23-603
13-320
(1) 99940-0601
93-5104 (L-230MM)
13-Z02
(2) 9YA75-0401
13-Z34
(1) 99283-0800
13-363H
20-339
ATOMOSPHERE
(2) 9YB16-0603
(1) 9YA75-0401
(1) 9YA75-0401
20-343B
(2) 90786-0635
56-145C
56-145C
20-415
(1) 90786-0620
93-5104 (L-190MM)
13-3482
13-3492
23-610C
23-615B
13-370
13-329B
Y
13-363N
20-411
13-363
13-363N
FWD
13-201A
ATOMOSPHERE
93-5104 (L-160MM)
(2) 99796-0612